APATOR

Smart D+

DN15 & DN20 single-jet vane-wheel dry water meter

water&heat

SMART D+

Smart D+ is the next generation in the "Smart" series of single-jet dry water meters, featuring exceptional measurement accuracy, low water consumption and modern design. These new solutions have been designed to significantly increase the metrological and service life parameters. The water meter is compatible with clip-on communication modules for automatic wired or wireless meter reading. The water meter design is MID Directive compliant, and is classed as operating in the R200 measurement range.

Application

Cold water supply systems operating at temperatures of up to 50°C or hot water supply systems operating at temperatures of up to 90°C for single and multi-family housing. The rotating counter facilitates reading of the water meter in specified operating orientations. For installation in horizontal piping with the counter upward (H↑) or to either side (H→) and in vertical piping with the counter sideways (V).

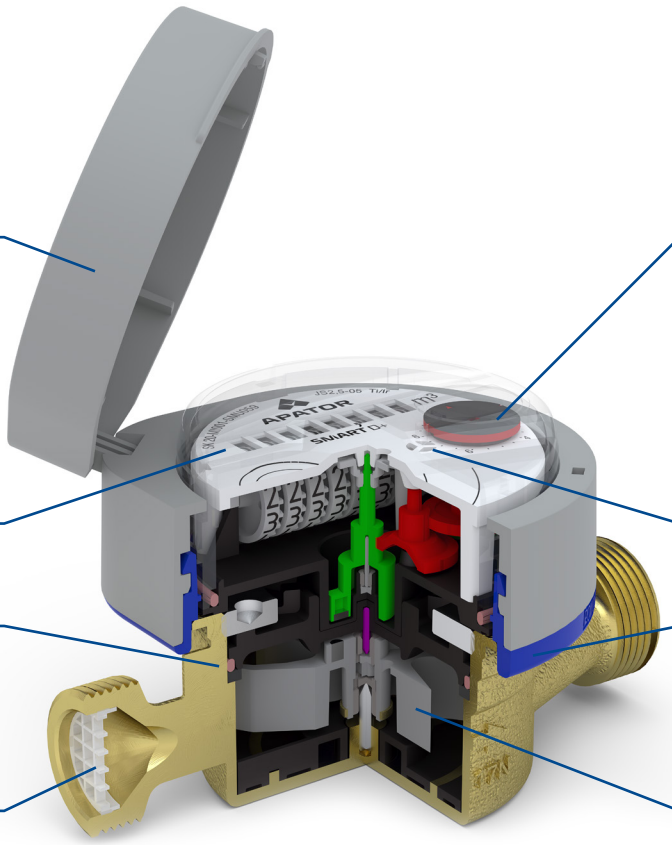

Counter cover to protect the counter from external impacts in the water meter's working environment.

Hermetic counter (with increased sealing levels) resistant to fogging, completely separated from the wet part of the water meter.

Counter mechanism rotation lock at 365° rotation.

Water meter inlet strainer to minimize water flow disturbances and at the same time protect the metering unit from contamination.

Dual counter reading detection system based on the induction and optical technologies used for the single pointer, which allows the choice of communication module appropriate for the installation environment.

Protection from external tampering – a counter disc with an indicator of the force applied to compress the counter glass.

Counter cover with an additional snap ring to protect the meter from unauthorized interference, while acting as a tamper-evident seal

Stable operation of the metering unit and magnetic coupling system, based on several structural and material improvements

Advantages

Economic

- exact measurements in the R range: up to 200-H and up to 80-V
- low starting flow
- EN14154 compliant resistance to external magnetic fields
- no need for straight sections upstream or downstream of the U0D0 water meter
- proprietary water meter counter cover design to increase resistance to adverse external impacts
- no need for copper wire and lead seal (compliant with RoHS Directive recommendations).

Convenience of use

- compatible with remote optical or inductive reading systems (over RF, via pulse signalling, or via M-Bus)
- hermetically-sealed counter, resistant to fogging, with clear numbers on the barrels in two colours for improved reading accuracy
- alarm output capability – the meter features a clip-on communication module, capable of remote indication of any removal of or damage to the module, disruption of operation, reverse flow, leakage, and more
- convenient reading, with the option of the swivel-set counter rotation of up to 365° relative to its axis
- modern and ergonomic design.

Low maintenance costs

- proven and durable design
- high operational durability.

Key features

- MID-compliant EC-type examination certificate
- pre equipped for AMR (optical and inductive) data communication modules
- two-point rotor bearings and other solutions and materials to ensure stable metrology over the service life
- potable water approved certified materials
- electronic diagnostics of metrological parameters
- special magnetic coupling design
- protection against mechanical interference - with a pin to deform the counter disc as permanent evidence of unauthorized interference.

Table 1. Specifications

Parameter					SMART D+			
					JS1,6-05* JS90 1,6-05* JS1,6-07* JS90 1,6-07*	JS2,5-05* JS90 2,5-05* JS2,5-07* JS90 2,5-07*	JS2,5-G1-05* JS90 2,5-G1-05* JS2,5-G1-07* JS90 2,5-G1-07*	JS4-05* JS90 4-05* JS4-07* JS90 4-07*
Nominal diameter			DN	mm	15		20	
Permanent flow rate			Q_3	m^3/h	1.6	2.5		4
Maximum flow rate			Q_4	m^3/h	2	3.125		5
Transitional flow rate	for cold water	H↑160** R200 V, H→R80	Q_2	dm^3/h	16 32	20 50		32 80
	for hot water	H↑160 V, H→R80			16 32	25 50		40 80
Minimum flow rate	for cold water	H↑160** R200 V, H→R80	Q_1	dm^3/h	10 20	12,5 31,3		20 50
	for hot water	H↑160 V, H→R80			10 20	15,625 31,3		25 50
Starting flow			–	dm^3/h	5	6		12
Q_2/Q_1 ratio			–	–	1.6			
Temperature class (rated operating temperature)			–	–	JS (T30, T50), JS90 (T30/90)			
Flow profile sensitivity class			–	–	U0, D0			
Indicating range			–	m^3	99,999			
Resolution of reading			–	m^3	0.00005			
Maximum pressure			P_{max}	MPa	16			
Maximum pressure loss			Δp	kPa	63			
Maximum permissible error range: $Q_2 \le Q \le Q_4$			ε	%	± 2 for water temperatures (0.1 to 30)°C ± 3 for water temperatures > 30°C			
Maximum permissible error range: $Q_1 \le Q < Q_2$			ε	%	± 5			
Water meter counter ingress protection class			–	–	IP 65			
Inlet and outlet pipe end threads			G	Inch	G¾	G¾; G⅞	G1	G1
Height			H	mm	69.5		70	
Height			H1	mm	73.5		74	
Height			H2	mm	134.2			
Height			h	mm	16.5		17	
Length			L*	mm	110	110	130	130
Diameter			D	mm	77			
Diameter			D_1	mm	90			
Weight (w/o connection fittings)			–	kg	0.463	0.458	0.589	0.552

Version **05** - 8-barrel counter, brass body, pre-equipped for communication module installation, version with a snap ring with a cover
Version **07** - 8-barrel counter, brass body, pre-equipped for communication module installation, version with a snap ring without a cover
Available on request:
* Available with custom body length, L = 105; 115 DN15 and 115 DN20
** Measurement range R available for size Q_3=1,6 m^3/h

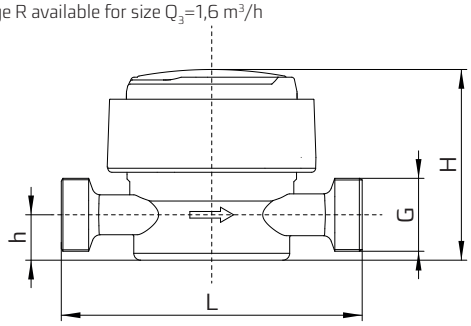

Water meter w/o cover

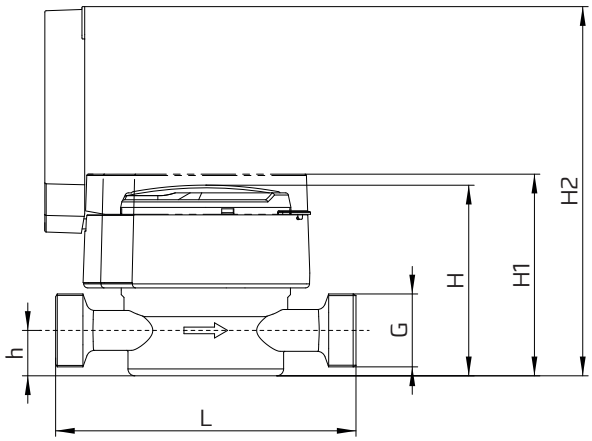

Water meter with cover

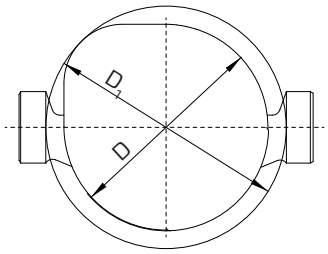

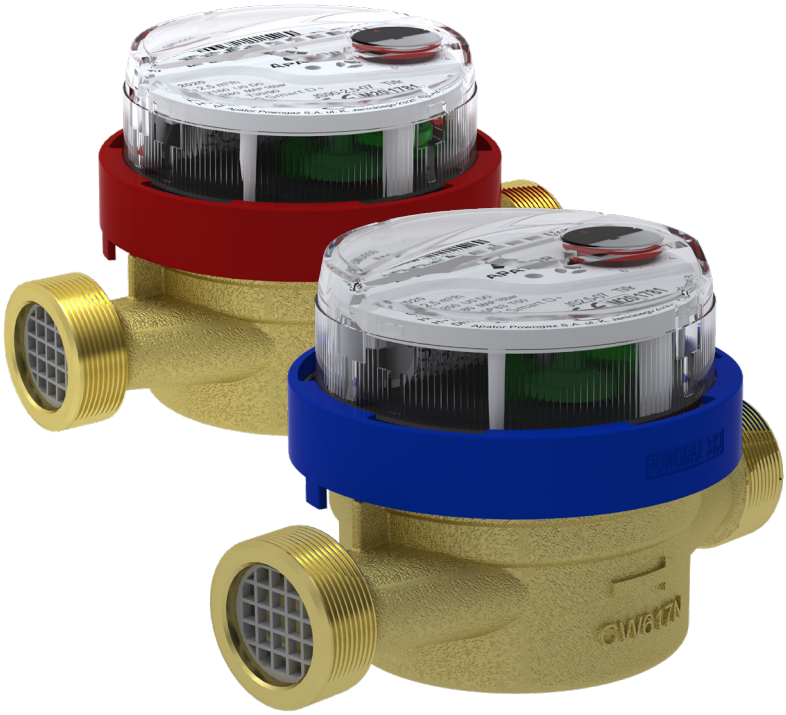

Connection fittings

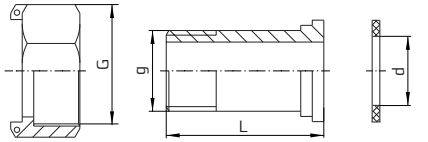

nut union washer

DN	G	g	d	L
	inch	inch	mm	mm
15	¾	1/2	17	37,5
20	1	3/4	23	45,6

The JS Smart D+ water version -07 with a snap ring but without the cover – replaces the previous ring and tamper-evident lead seal.

The JS Smart D+ water version -05 with a snap ring and with the cover – replaces the previous ring and tamperevident lead seal.

Pressure loss chart

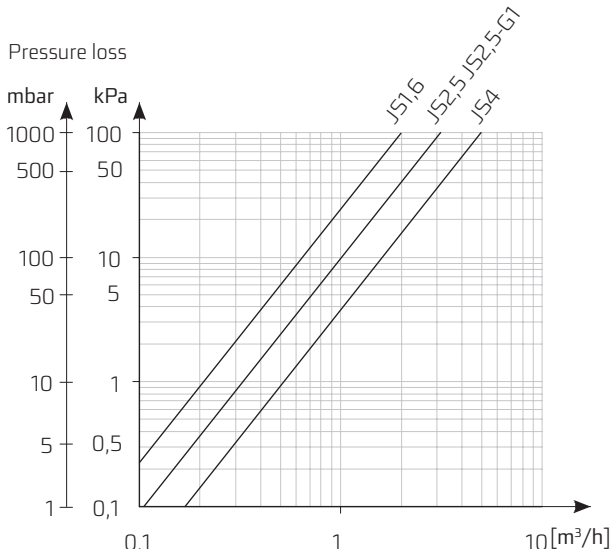

Typical error chart

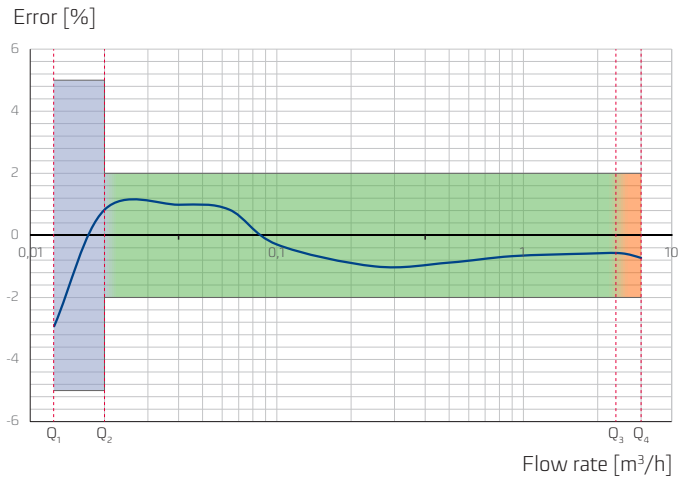

Regulatory and standard compliance

- Directive 2014/32/EC of the European Parliament and of the Council of 26 February 2014 on the harmonisation of the laws of the Member States relating to the making available on the market of measuring instruments
- Polish Act of 13/04/2016 on market surveillance and compliance assessment systems
- EN-ISO 4064-1-5:2014 (E) - Water meters for cold potable water and hot water
- OIML R49:2013 - Water meters intended for the metering of cold potable water and hot water
- EC type test certificate-cold water
- Classification of environmental, climate and mechanical conditions: class B (ref. EN-ISO 4064-1:2014 (E))
- Classification of mechanical environmental conditions: class M1, per Directive 2014/32/EU of the European Parliament and of the Council of 26 February 2014
- Classification of electromagnetic environmental conditions: class E1 and E2, per EN-ISO 4064:2014 and Directive 2014/32/EC of the European Parliament and of the Council of 26 February 2014,
- PZH National Institute of Hygiene certificate (all materials used in JS water meters have Hygiene Certificates for use with potable water).

Example of a JS Smart D+ water meter with an induction RF module installed. The legend on the water meter counter shield help identify the ratings even with the clip-on communication module installed.

Remote indication relay & flow rate measurement

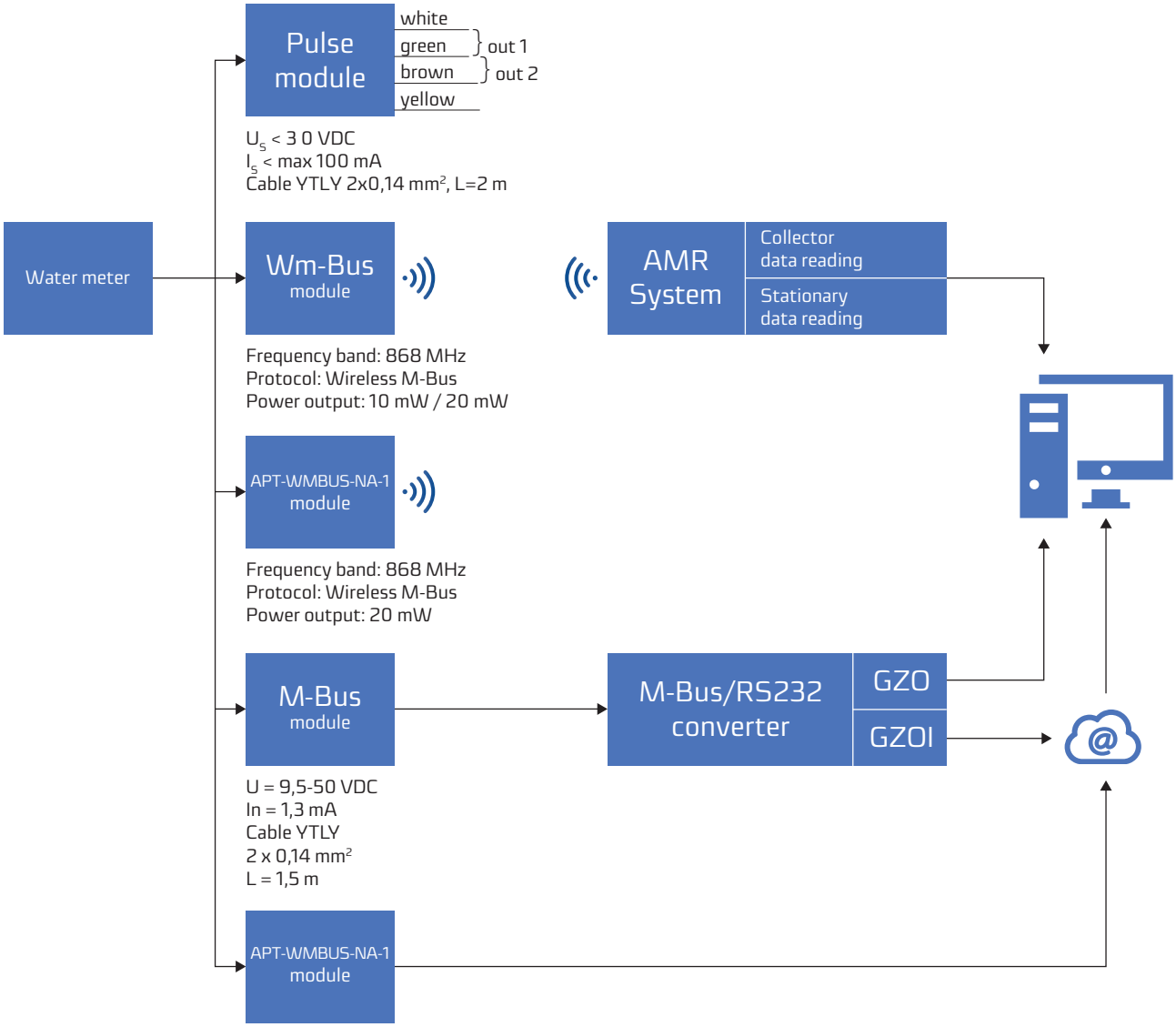

Ordering code example:

JS 2,5-02 Smart D+ L W

- W — Version: O – shield w/cover; P – snap ring (tamper-evident seal)
- L — Non-standard water meter length
- D+ — Water meter model - up to R200
- 02 — Brass body
- 2,5 — Flow volume Q3
- JS — water meter: JS – cold water; JS90 – hot water

Available options:

- water meter unions, w/o check valve
- disposable clamps with snap-on seals made of plastic, with unique numbering (a safeguard against mechanical manipulation of the water meter unions)

The data shown here is current on the date of issue.
The manufacturer has the right to modify and improve the products without notice.
This publication is indicative only and should not be construed as a commercial offer under the Polish Civil Code.

Apator Powogaz S.A.
Jaryszki 1c, 62-023 Żerniki, Poland
e-mail: handel.powogaz@apator.com
Office: tel. +48 61 8418 101
Sales: tel. +48 61 8418 ext. 133 / 136 / 138 / 148
Exports: tel. +48 61 8418 139